ESC T-HEAD MOORING BOLLARD

DATASHEET

ESC's latest generation of T Head Bollards provide a compact high strength bollard system that can be utilised in a multitude of configurations

- ✓ Lines: Horizontal Angle ±90°, Vertical Angle 60°/-15°
- ✓ General purpose applications up to 300 tons
- ✓ Suitable for steeper rope angles
- ✓ Ideal for multi purpose berths

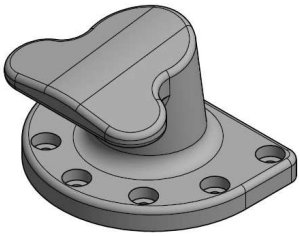

Note: Anchor Bolts omitted from illustration for clarity

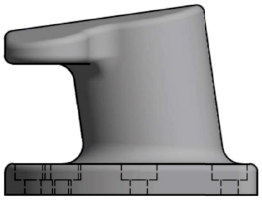

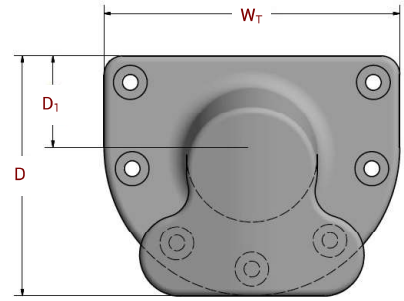

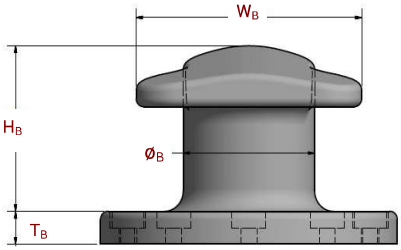

Dimension	Bollard Capacity (Tons)											
	10	15	22.5	30	50	80	100	125	150	200	250	300
T_B	32	40	40	40	50	70	80	80	90	90	120	155
H_B	205	235	255	255	350	380	410	410	435	500	610	670
W_B	220	340	350	350	500	550	600	600	700	800	930	980
W_T	216	410	430	450	640	640	790	850	900	1000	1090	1200
D	236	335	355	375	540	550	640	700	750	850	915	925
$Ø_B$	120	160	180	200	260	280	350	350	400	450	500	500
D_1	118	130	140	150	230	230	245	275	300	350	370	325
Bolts	M20	M24	M30	M30	M36	M42	M42	M48	M48	M56	M64	M64
Bolt Length	450	500	500	500	500	800	800	900	1000	1000	1375	1550
Recess	47	55	55	55	65	85	95	95	105	105	135	170
Quantity	4	5	5	5	5	6	7	7	7	8	8	10

MATERIAL SELECTION

MATERIALS	STANDARD(S)	GRADE (S)
Ductile Cast Iron (for body)	BS EN 1563 ASTM A 536 GB/T 1348	EN-GJS-450 to 500 65-45-12 to 80-55-6 QT450-10 to QT-600-3
Cast Steel (for body)	ASTM A148 ISO 1030 GB/T 11352	65-35 to 80-50 230-450 to 340-570 ZG230-450 to ZG340-640
Anchor Bolts (galvanized)	ISO 898 BS 3692 ASTM	Gr. 5.8 to 8.8 (galvanized) Gr. 5.8 to 8.8 (galvanized) ASTM F1554 Gr. 105 (galvanized)

OTHER DESIGNS

ESC is able to produce bollards of virtually any dimension. Shown here are just the standard range of bollards, but custom design bollards can be manufactured according to the client's design.

Disclaimer
The information provided within this datasheet is for general information purposes only, without any warranty. ESC shall not be held responsible for any errors, omissions or misuse of any of the information provided. ESC disclaims any and all liability resulting from the ability or inability to use the information within this document. Anyone using the information contained does so at their own risk. ESC shall not be held liable for any damages which includes any financial losses or incidental or consequential damages arising from the use of this information. The product range contained is liable to change without notice.

ESC MARINE

ESC Marine Systems Global
W www.escmarinesystems.com
E info@escmarinesystems.com
T +852 3956 1868

Download the App 'ESC Group'

Download on the App Store

ANDROID APP ON Google play